8. Exploded Views and Parts Lists

8-1. Total Assembly

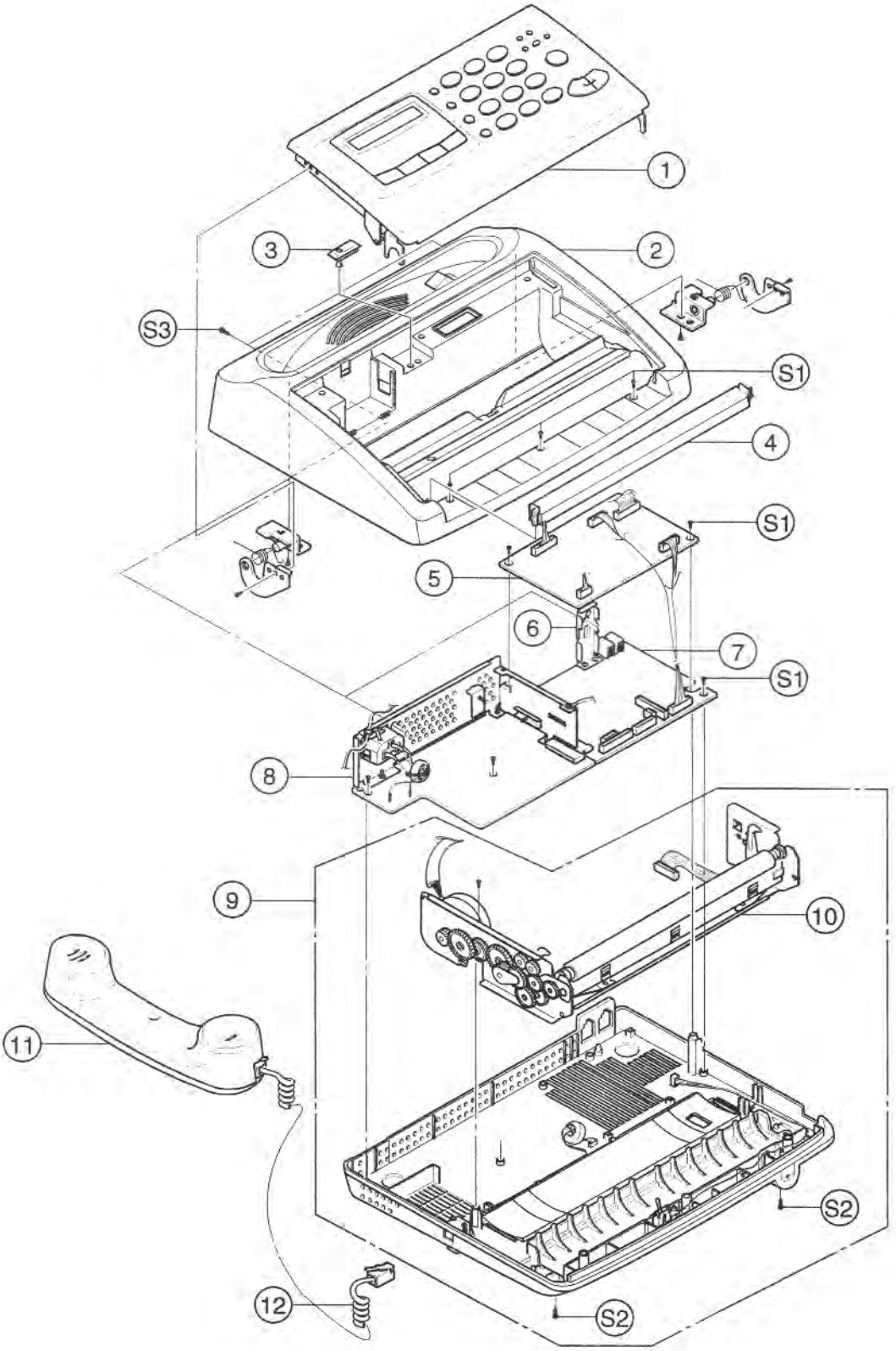

Total Assembly Parts Lists

	Location No.	Description	SEC. Code	Q'ty	Remark
	1	ASS'Y-OPE UNIT	JF96-01249A	1	
	2	ASS'Y-TOP COVER	JF96-01248A	1	
	3	SPACER	JF72-40611A	1	
	4	GUIDE-TX	JF72-41122Z	1	
	5	PBA-LIU	JF92-00843A	1	
	6	REAR-BRKT	JF70-10681A	1	
	7	PBA-MAIN	JF92-00842A	1	
	8	SMPS-V2, AC/DC	JF44-10059A	1	
	9	ASS'Y-BASE UNIT	JF96-01274A	1	
	10	ASS'Y-MAIN CHASSIS UNIT	JF96-01253A	1	
	11	ASS'Y-HANDSET	JF96-01262A	1	
	12	CURL-CORD	JF39-60075A	1	
	S1	SCREW, TAPTITE, BH, +, M3, L8	6003-000015	11	
	S2	SCREW, TAPTITE, BH, +, M3, L6	6003-000261	2	
	S3	SCREW, TAPTITE, BH, +, M3, L6	6003-000115	2	

8-2. Ass'y OPE Unit

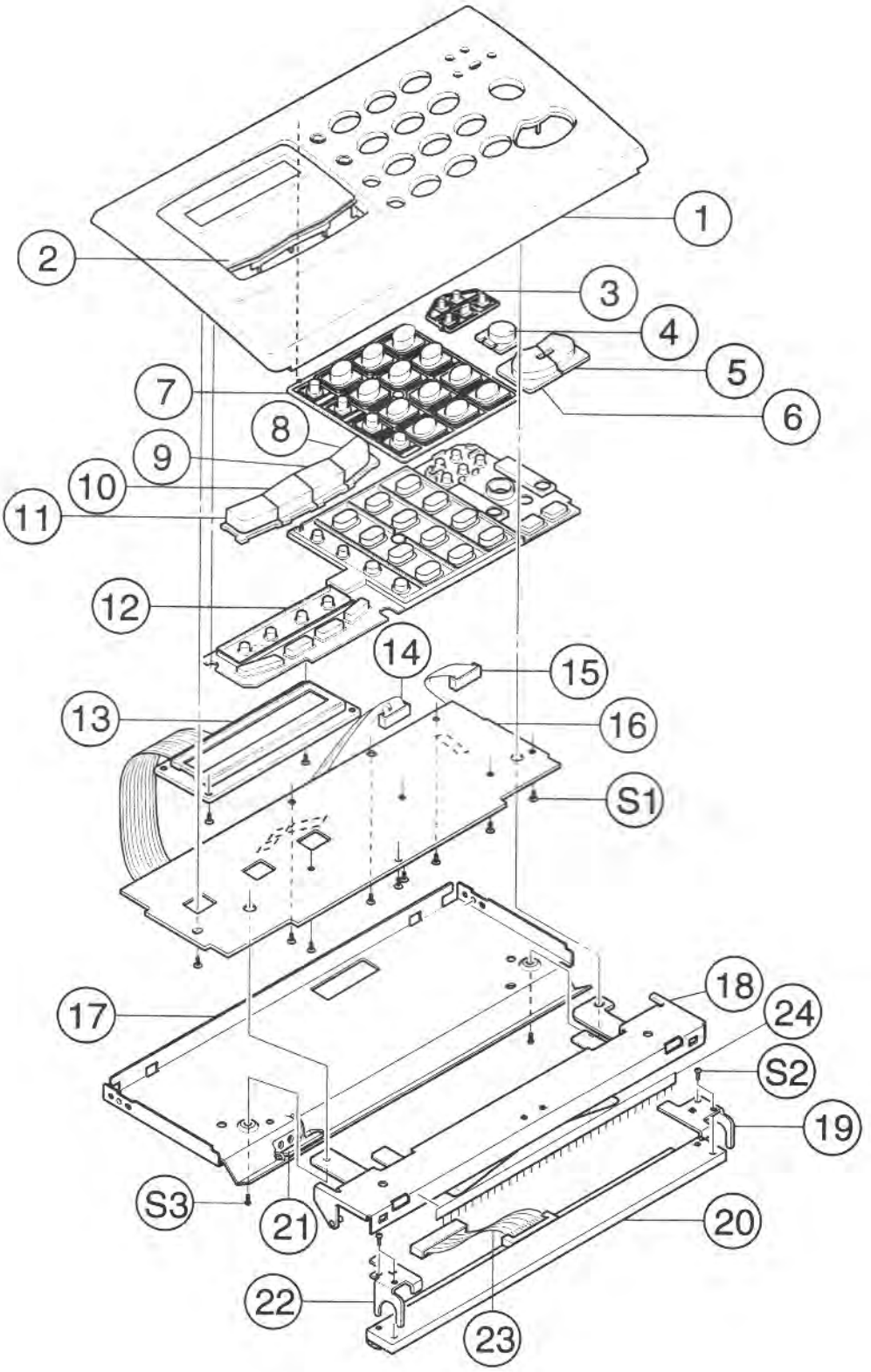

Ass'y OPE Unit Parts Lists

	Location No.	Description	SEC. Code	Q'ty	Remark
		ASS'Y-OPE UNIT	JF96-01249A	1	
	1	OPE COVER	JF72-42016A	1	
	2	LCD-WINDOW	JF75-11004A	1	
	3	KEY-ONETOUCH	JF72-42021A	1	
	4	KEY-OHD	JF72-42022A	1	
	5	KEY-STOP	JF72-42029A	1	
	6	KEY-START	JF72-42028A	1	
	7	KEY-TEL	JF72-42026A	1	
	8	KEY-MENU	JF72-42020A	1	
	9	KEY-RESOLUTION	JF72-42018B	1	
	10	KEY-RECEIVE	JF72-42017B	1	
	11	KEY-SPEED	JF72-42019B	1	
	12	RUBBER-CONTACT	JF73-40521A	1	
	13	DISPLAY-LCD	JF07-20061A	1	
	14	CBF-WIRE, MAIN-OPE, 16 P	JF39-41064A	1	
	15	CBF-WIRE, LIU-OPE, 7 P	JF39-40957A	1	
	16	PBA-OPE	JF92-00844A	1	
	17	CHASSIS OPE UNIT	JF70-10863A	1	
	18	BRKT-TPH UNIT	JF70-10861B	1	
	19	GUIDE-TPH(R)	JF70-10679A	1	
	20	PRINT HEAD-THERMAL	JF47-30069A	1	
	21	PBA-P.EMPTY	JF92-00704B	1	
	22	GUIDE-TPH(L)	JF70-10679B	1	
	23	CBF-WIRE, MAIN-TPH, 14P	JF39-40955A	1	
	24	BRUSH-ANTISTATIC	JF75-10650A	1	
	S1	SCREW, TAPTITE, PWH, +, B, M2.	6003-000193	11	
	S2	SCREW-MACHINE, BH, +, M3, L4	6001-000125	4	
	S3	SCREW, TAPTITE, BH, +, B, M3, L	6003-000015	2	

8-3. Ass'y COVER TOP

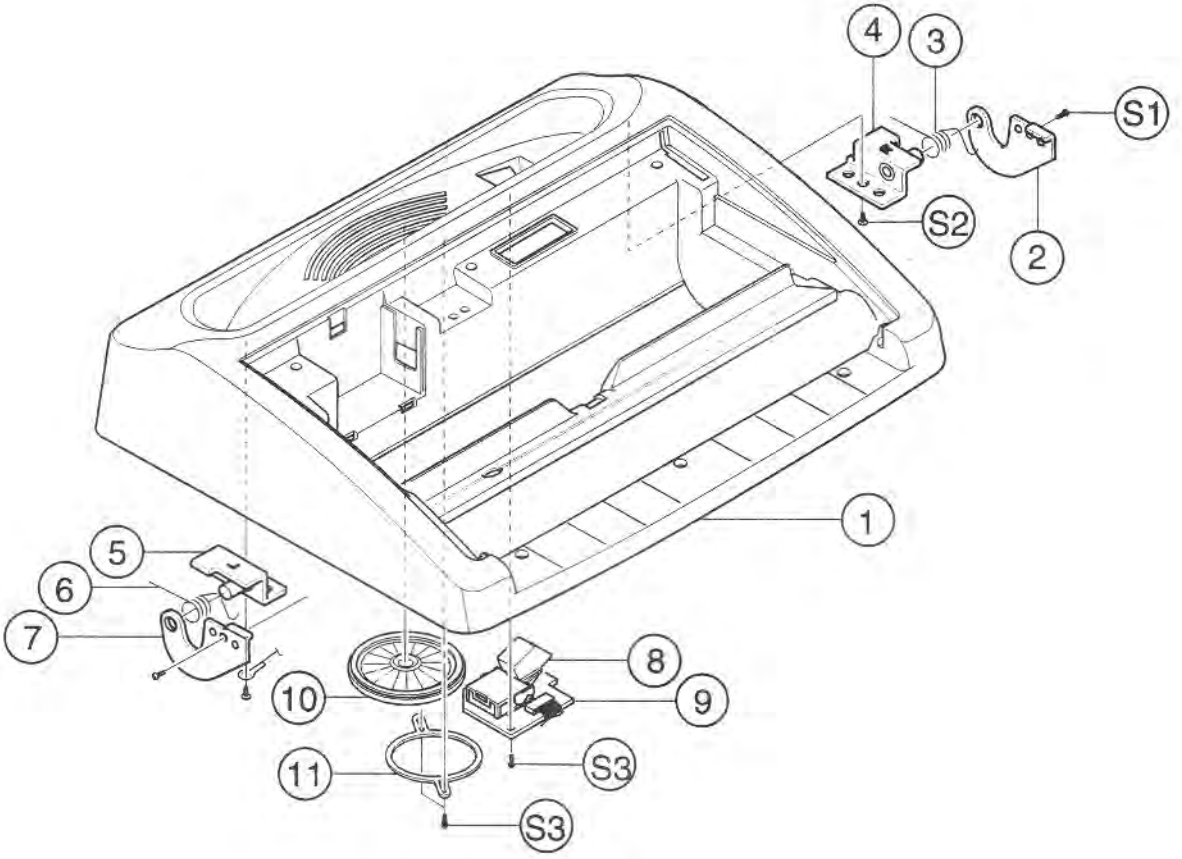

Ass'y COVER TOP Parts Lists

	Location No.	Description	SEC. Code	Q'ty	Remark
		ASSEMBLY-COVER TOP	JF96-01248A	1	
	1	TOP COVER	JF72-42015A	1	
	2	HINGE-OPE(R)	JF70-10676A	1	
	3	COVER-SPRING(R)	JF70-40562A	1	
	4	HINGE-BRKT(R)	JF70-10677A	1	
	5	HINGE-BRKT(L)	JF70-10677B	1	
	6	COVER-SPRING(L)	JF70-40562B	1	
	7	HINGE-OPE(L)	JF70-10676B	1	
	8	SWITCH-HOOK, 48 V, 200 mA	3409-000117	1	
	9	PBA-HOOK	JF92-00845A	1	
	10	SPEAKER, 1 W, 8 OHM, 83dB	3001-001044	1	
	11	UNIT-FIXING BRKT	GB70-10500A	1	
	S1	SCREW, TAPTITE, BH, +, M3, L6	6003-000261	3	
	S2	SCREW, TAPTITE, BH, +, M3, L8	6003-000015	2	
	S3	SCREW, TAPTITE, PWH, +, B, M2.5, L6	6003-000193	2	

8-4. Ass'y Handset

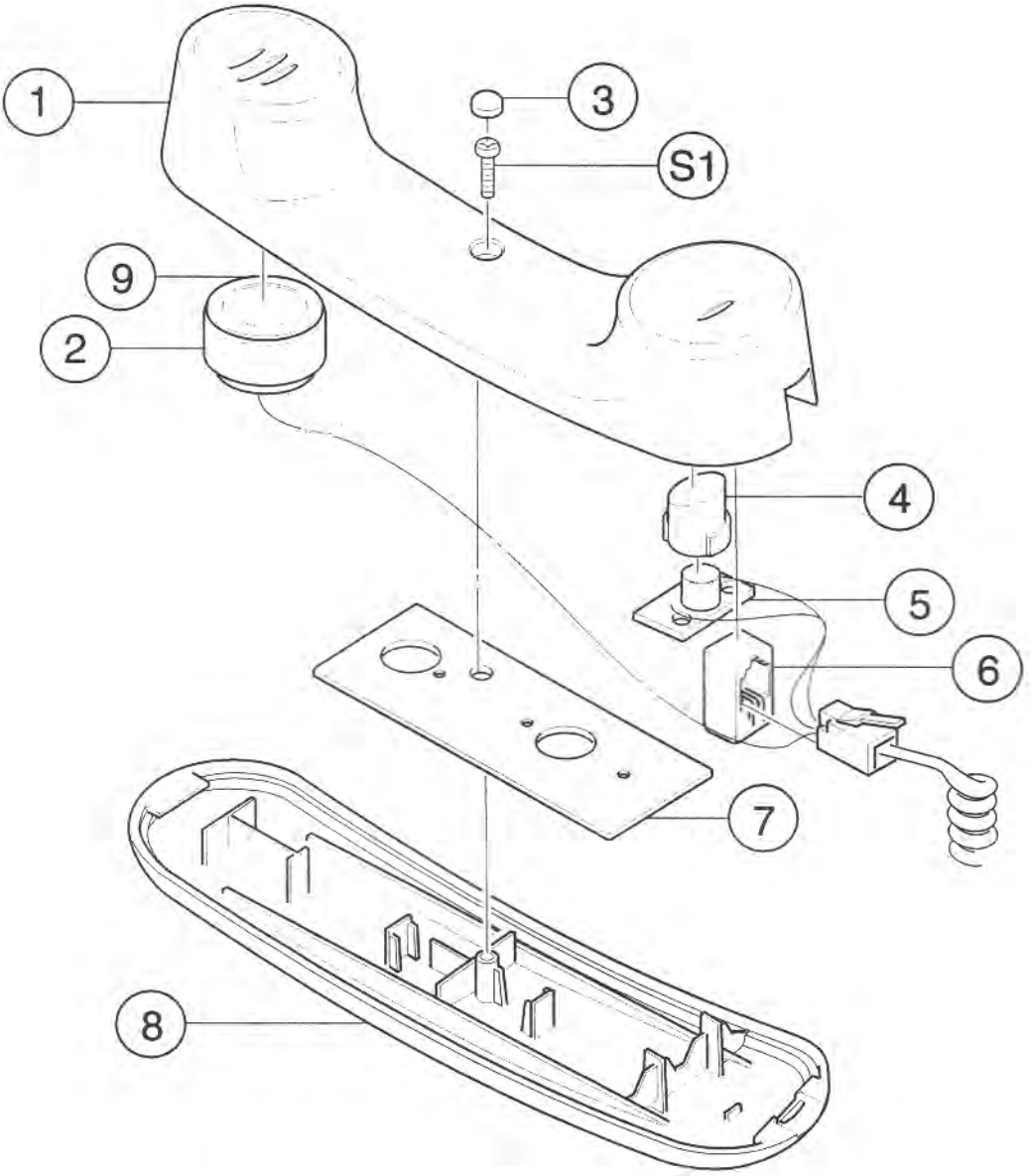

Ass'y Handset Parts Lists

	Location No.	Description	SEC. Code	Q'ty	Remark
		ASS'Y-HANDSET	JF96-01262A	1	
	1	HANDSET-LOWER	JF72-42014A	1	
	2	AUDIO-RECEIVER, 160 OHM	3009-001001	1	
	3	HOLD-DUMMY	GB72-40792A	1	
	4	RUBBER-MIC	JF73-40501A	1	
	5	PBA-HOOK	JF92-00625A	1	
	6	CBF-HARNESS	JF39-40834A	1	
	7	WEIGHT-BALANCE	JF70-10864A	1	
	8	HANDSET-UPPER	JF72-42013A	1	
	9	RING-OP, ID17, OD35	6044-000138	1	
	S1	SCREW, TAPTITE, PH, +, B, M3,	6003-000168	1	

8-5. Ass'y Base

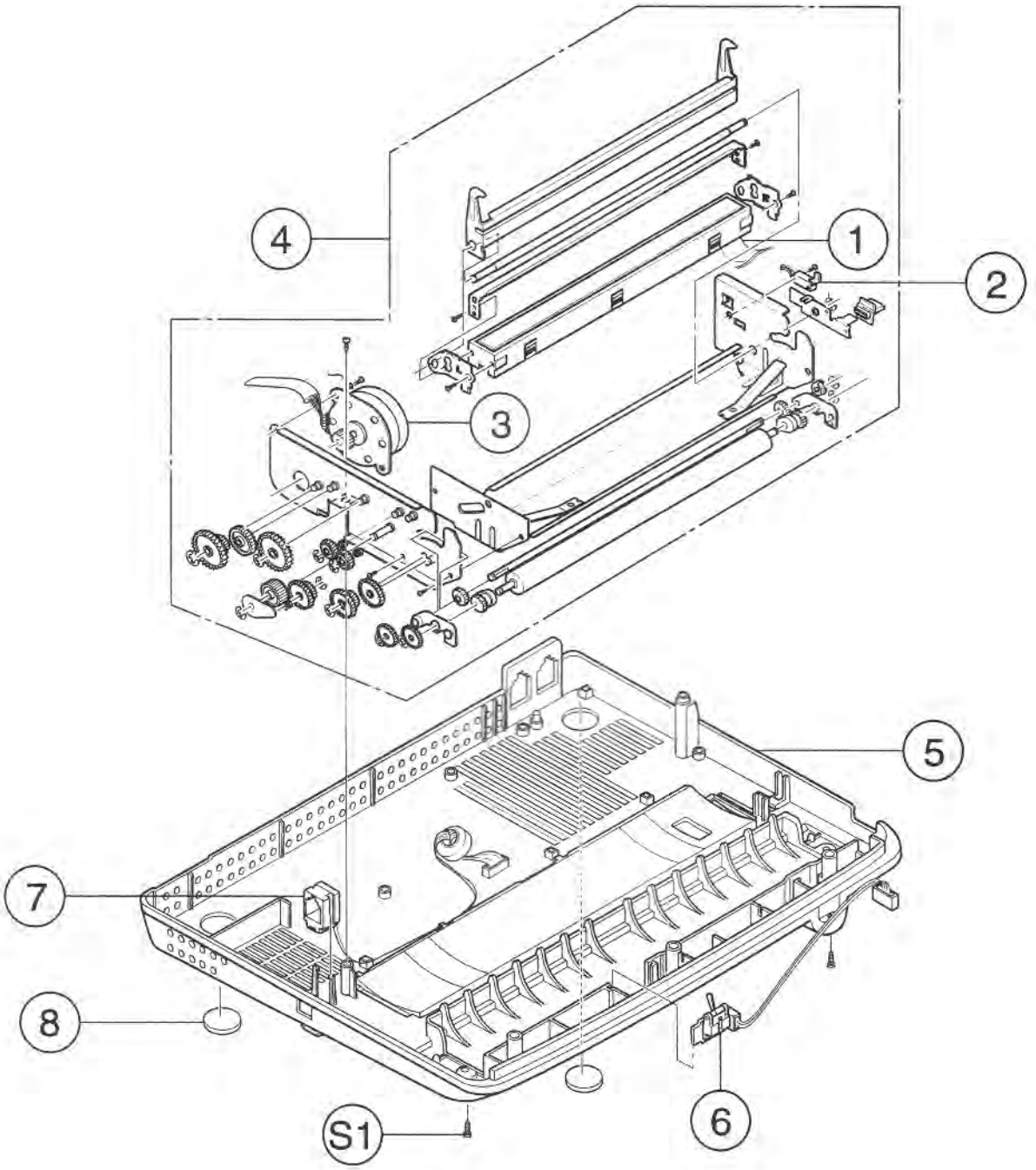

Ass'y Base Parts Lists

	Location No.	Description	SEC. Code	Q'ty	Remark
		ASS'Y-BASE	JF96-01274A	1	
	1	CBF-WIRE, MAIN-CIS/MODE	JF39-41062A	1	
	2	MICRO-SWITCH	3405-000166	1	
	3	STEP-MOTER, 7.5 DEG, 24 V	3101-000171	1	
	4	ASS'Y-MAIN CHASSIS UNIT	JF96-01253A	1	
	5	BASE	JF72-42025A	1	
	6	PBA-D'DET	JF92-00704A	1	
	7	CBF-WIRE, HANDSET-LIU	JF39-41066A	1	
	8	RUBBER-FOOT	JF73-10002A	2	
	S1	SCREW, TAPTITE, BH, +, M3, L6	6003-000261	2	

8-6. Harness

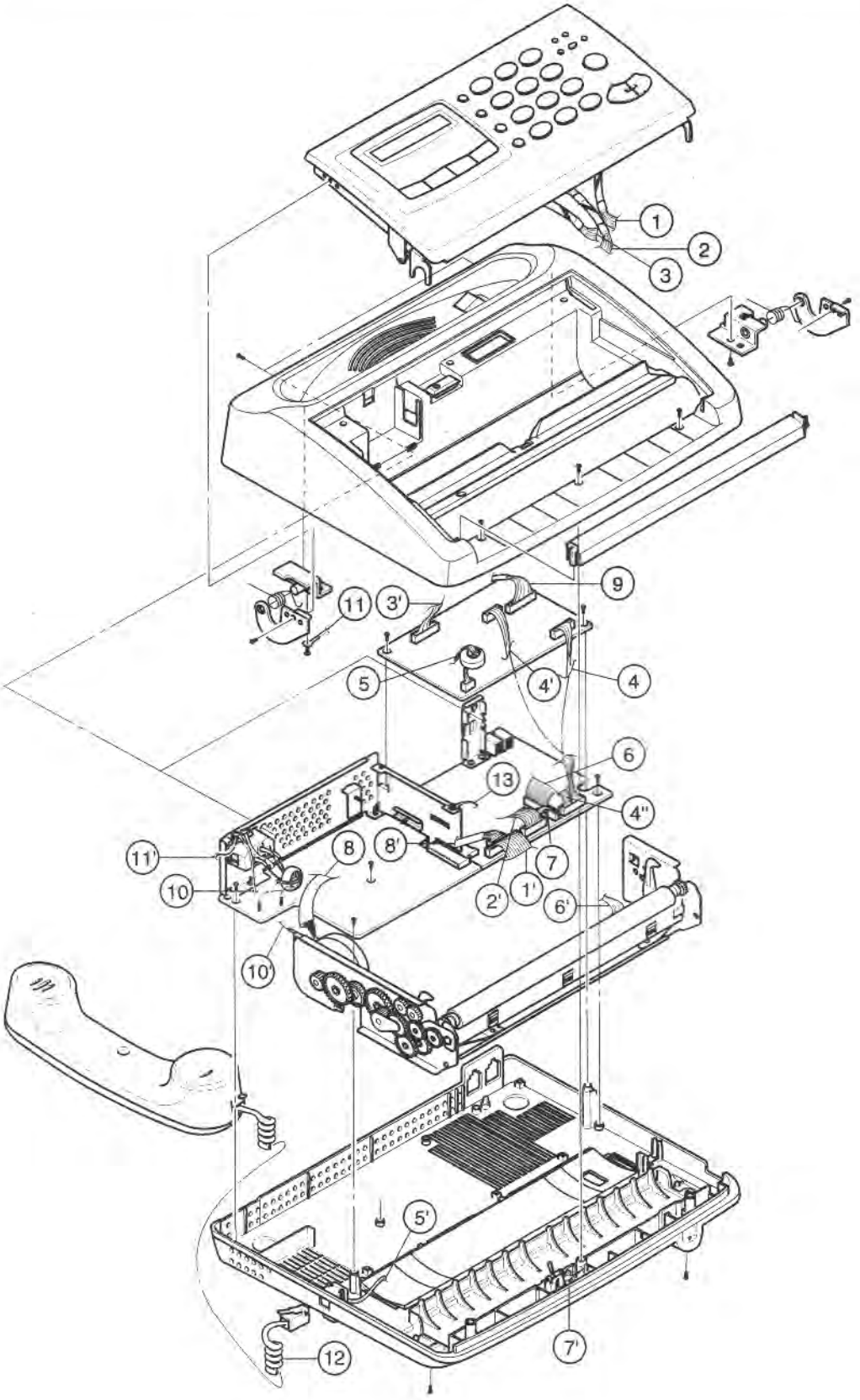

Harness Parts Lists

	Location No.	Description	SEC. Code	Q'ty	Remark
	1	CBF-WIRE, MAIN-TPH, 14 P	JF39-40955A		
	2	CBF-WIRE, MAIN-OPE, 16 P	JF39-41064A		
	3	CBF-WIRE, LIU-OPE, 7 P	JF39-40957A		
	4	CBF-WIRE, MAIN-LIU, 22 P	JF39-41063A		
	5	CBF-WIRE, LIU-HANDSET	JF39-41066A		
	6	CBF-WIRE, MAIN-CIS/MODE	JF39-41062A		
	7	CBF-WIRE, MAIN-D.DET	JF39-40956A		
	8	STEP-MOTER, 7.5 DEG, 24 V	3101-000171		
	9	CBF-WIRE, LIU-SPK/HOOK	JF39-41065A		
	10	CBF-WIRE, POWER-MOTOR	JF39-40963B		
	11	CBF-WIRE, POWER-TOP COVER	JF39-40962B		
	12	CURL CORD	JF39-60075A		
	13	CABLE CLAMP	6502-001026		